Technical
Information

Current Control in TeleCom Applications with Split Core Transducers

Traditionally, current sensors are designed and developed with one core and an aperture to accommodate the primary current carrying conductor. Typically, you must remove the primary busbar or cable to mount the transducer, and place the primary conductor through the aperture.

A new design for sensors through the HOP & HTR current transducers series has been introduced by LEM.

These devices were designed to meet current measurement requirements in Telecom Power Supply applications.

The main characteristic feature of the series is a split core design, which allows for ease of installation around existing busbars or cables, without removal of the busbar or cable.

These series are based on the Open Loop Hall effect technology principle (Fig.1), which meets current measurement requirements from 50 A_{RMS} up to 2000 A_{RMS}. Key characterics include: high performance, compact size (see cover page), high EMC immunity, isolation, ±4 V instantaneous voltage output, and a power supply of ±12 or ±15 V .

HOP & HTR series, main features and advantages

Simple and quick to install in retrofit applications, LEM's new split core series' also provide installation flexibility in systems where power shut-off to install the transducer is not feasible.

Fastening the HOP models requires removal and reinstallation of two screws or two clips, depending on the model.

HTR series is secured to the primary conductor by a locking clip molded into the hinged split core housing. Supplementary screw-hole fastening is incorporated into the housing.

There are two different aperture types available, rectangular window or circular window, suitable for a varitey of busbar or cable diameters.

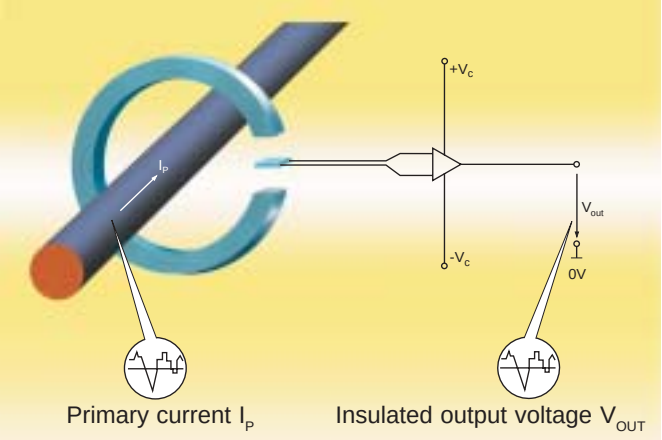

Fig. 1: Open Loop Hall effect technology principle

Fig. 2: Three different mechanical designs proposed by the HOP series.

All transducers have the following main electrical parameters:

- Accurate current measurement for AC, DC, pulse and complex waveforms, with galvanic isolation between the primary circuit (high power) and the secondary circuit (electronic circuit).
- Power Supply: ±12 .. ±15V.
- Typical accuracy (without initial offset): ±2% of I_{PN} (*).
- Wide operating temperature range.
- High overload capability allowing secondary equipment protection.

HOP-SB series: For mounting on primary busbars *Transducers with Instantaneous Voltage output.*

Main Characteristics

Rectangular busbar mounting.

Fasten HOP models in one of two ways, either :

1. Directly to the primary busbar without bolting to a panel, or
2. To the primary busbar or cable bolted to a panel or frame.

Three different package designs (Fig. 2) accommodate various primary busbar or cable configurations to measure nominal currents from 200 A_{RMS} to 2000 A_{RMS}**:**

1. **Package 1 :**
   Aperture with a rectangular window : 41 x 12.5 mm
2. **Package 2 :**
   Aperture with a rectangular window : 104 x 40 mm
3. **Package 3 :**
   Aperture with a rectangular window : 163 x 50 mm

** This characteristic is valid only for a primary conductor filling completely the transducers aperture.*

HOP-SB series (cont.)

I_{PN} A_{RMS}	I_P ± A	V_C ±V	V_{OUT} @ I_{PN} ±V	Package no.	Type
200	300	12 ... 15	4	1	**HOP 200-SB**
300	450	12 ... 15	4	1	**HOP 300-SB**
400	600	12 ... 15	4	1	**HOP 400-SB**
500	750	12 ... 15	4	1	**HOP 500-SB**
500	1000	12 ... 15	4	2	**HOP 500-SB/SP1**
600	900	12 ... 15	4	1	**HOP 600-SB**
800	1600	12 ... 15	4	2	**HOP 800-SB**
1000	2000	12 ... 15	4	2	**HOP 1000-SB**
1500	3000	12 ... 15	4	2	**HOP 1500-SB**
2000	3000	12 ... 15	4	2	**HOP 2000-SB**
2000	3000	12 ... 15	4	3	**HOP 2000-SB/SP1**

Main Characteristics (cont.)

Instantaneous ±4 V output.

Bipolar voltage supply ±12 up to ±15 V (±5 %).

With Open Loop Hall effect technology, a typical accuracy at I_{PN}, at +25 °C, at ±15 V, of ± 2 % (*) is possible (without initial electrical and magnetic offset), because LEM uiltizes two Hall chips per sensor (Fig. 3 & 4).

Linearity error is similar to a standard Open Loop transducer, between 0,5 and 1 % of I_{PN}.

Frequency bandwidth (-1dB): DC from 4 to 10 kHz according to the model used (small signal to avoid excessive core heating at high frequencies).

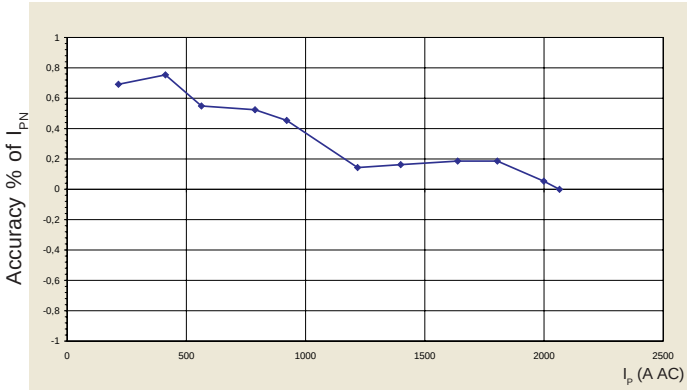

Fig. 3: HOP 2000-SB Accuracy in AC applications (initial offset cancelled) (Transducer calibration (gain and offset adjustment) done at 2000 A).

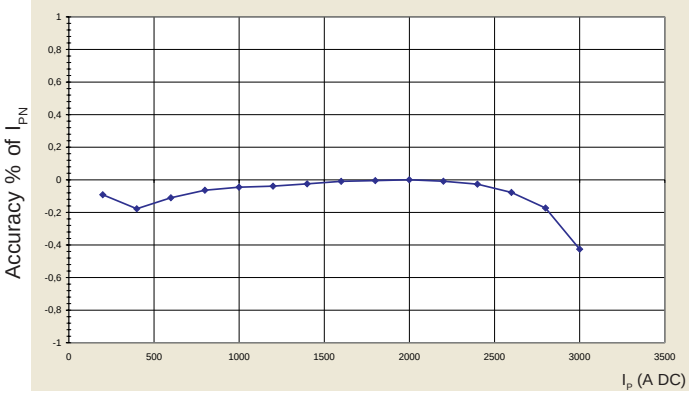

Fig. 4: HOP 2000-SB Accuracy in DC applications (initial offset cancelled) (Transducer calibration (gain and offset adjustment) done at 2000 A).

HTR-SB series

I_{PN} A_{RMS}	I_P ± A	V_C ± V	V_{OUT} @ I_{PN} ± V	Package no.	Type
50	100	12 ... 15	4	4	**HTR 50-SB**
100	200	12 ... 15	4	4	**HTR 100-SB**
200	400	12 ... 15	4	4	**HTR 200-SB**
300	600	12 ... 15	4	4	**HTR 300-SB**
400	800	12 ... 15	4	4	**HTR 400-SB**
500	1000	12 ... 15	4	4	**HTR 500-SB**

Main Characteristics

Split core transducers for cable mounting.

One mechanical design (Fig. 5) to measure nominal current from 50 A_{RMS} to 500 A_{RMS} for primary cable mounting:

1. **Package 4 : HTR**
   Circular aperture, 21 mm diameter**.**

Fig. 5: HTR models.

Instantaneous voltage output:

± 4 V (HTR models).

Bipolar voltage supply:

±12 V ... ±15 V (±5 %) for the HTR models.

** This characteristic is valid only for a primary conductor filling completely the transducers aperture.*

HTR-SB series *(Cont.)*

With Open Loop Hall effect technology, typical accuracy at I_{PN}, at +25 °C, at ±15 V, of ±2 % (*) is possible (without initial electrical and magnetic offset) with the HTR models.

Linearity error is similar to a standard Open Loop transducer, between 0,5 % and 1 % of I_{PN} (Fig. 6).

Frequency bandwidth:
- For the HTR series: DC to 10 kHz (-1 dB)**

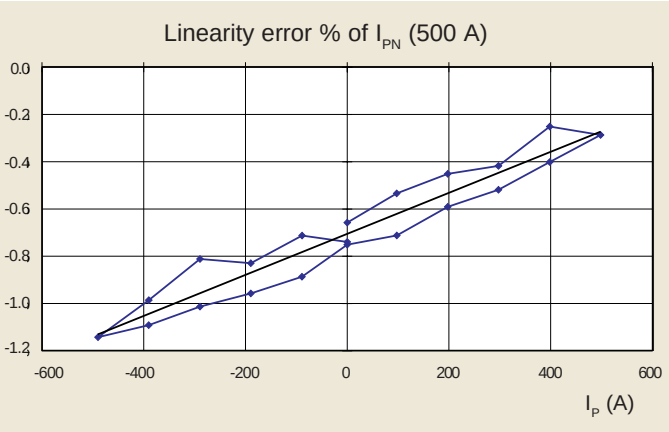

Fig. 6: HTR 500-SB linearity error curve, initial offset integrated. Max linearity error < 0.2 %.

Fig. 7: The HTR models are easily opened using a small flat-tip screwdriver as shown.

TELECOM networks handle call volume in the following ways:

1. For **local calls**, the connection is established and managed by "Local Switches." There are usually several Local Switches in each city.
2. When a **long distance** call is required, the local switch connects to a "High Volume Switch." This switch handles the call through another High Volume Switch down to the Local Switch of the called party. There are usually one or two high Volume Switches in each city.
3. For **international calls**, the call goes through the Local Switch, then a High Volume Switch and finally through an International High Volume Switch that connects to the foreign country. Once in the foreign country, the call is handled to the receiving party through a High Volume Switch and a Local Switch.
4. The **mobile telephone network** is organised in "cells." Each cell is connected to its neighboring cell, which contains a set of transmitters, receivers and relay stations (antennas).

Often some cells or substations, such as transmitters/ receivers of mobile phones, are located in remote areas. (Antenna).

To keep these units in good working order, manufacturers use devices (Energy Management System), which monitor the network power supply and auxiliary batteries, which activate an alarm in case of a problem. In these devices, LEM transducers are used for the current measurement. (Fig. 8).

Fig. 8: HOP current transducer in a Chinese TeleCom application.

This method is also used for the power supply and backup battery monitoring of the switches.
All switches used on the public network are powered from the main transmission source, and have a backup power source, which is usually 24 V or 48 V DC (sometimes 78 to 96 V DC).

* *This characteristic is valid only for a primary conductor filling completely the transducers aperture.*
** *Small signal to avoid excessive core heating at high frequencies.*

1. AC to DC converters in switch and relay stations, require current measurement. This is a typical Telecom power supply application, where the current transducer controls the output current.

   Two methods can be employed to generate the DC bus:

   1.1 Several **SMPS** (**S**witch **M**ode **P**ower **S**upply) connected in parallel measure lower currents from 30A to 60A. This current measurement is for control and for power sharing between the SMPS...
   (Fig. 9, single (1~) or three (3~) phase supply)

   1.2 ...or in a **Rectifier,** where higher currents from 200A to 1000A are measured.
   (Fig. 10, left side of a large three phase rectifier)

2. Battery banks are installed to backup the switches. The battery bank currents for charge and discharge range from 200A to1000A, and are typically monitored using resistive shunts. The trend is to replace these shunts with current transducers, due to the insertion losses of resistive shunts. Ideally, split core transducers can be used for ease and speed of installation. This is a **Battery Monitoring application** (Fig. 10)

3. LEM split core current transducers are also used to measure output current in TeleCom Power Distribution applications, where current levels from 30A to 100A are present. (Fig. 10, right side).

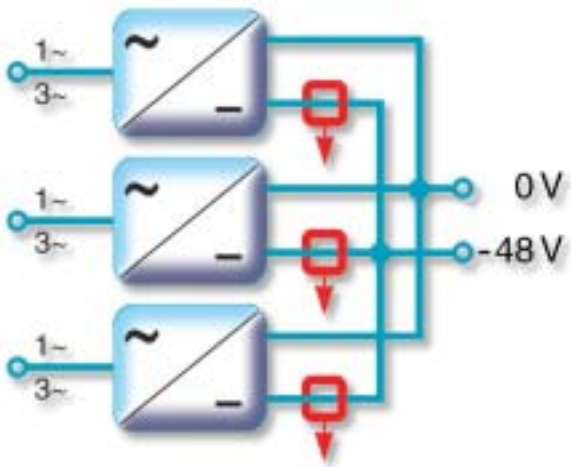

Fig. 9: Current measurement in SMPS, connected in parallel.

LEM offers a Five-Year Warranty on all our current and voltage transducers

All LEM transducers are CE marked, which guarantees the product is in compliance with the European EMC directive 89/336/EEC.

EN50178 is the reference standard used at LEM to guarantee overall performance of our current and voltage transducers in industrial, electrical, mechanical and environmental parameters.

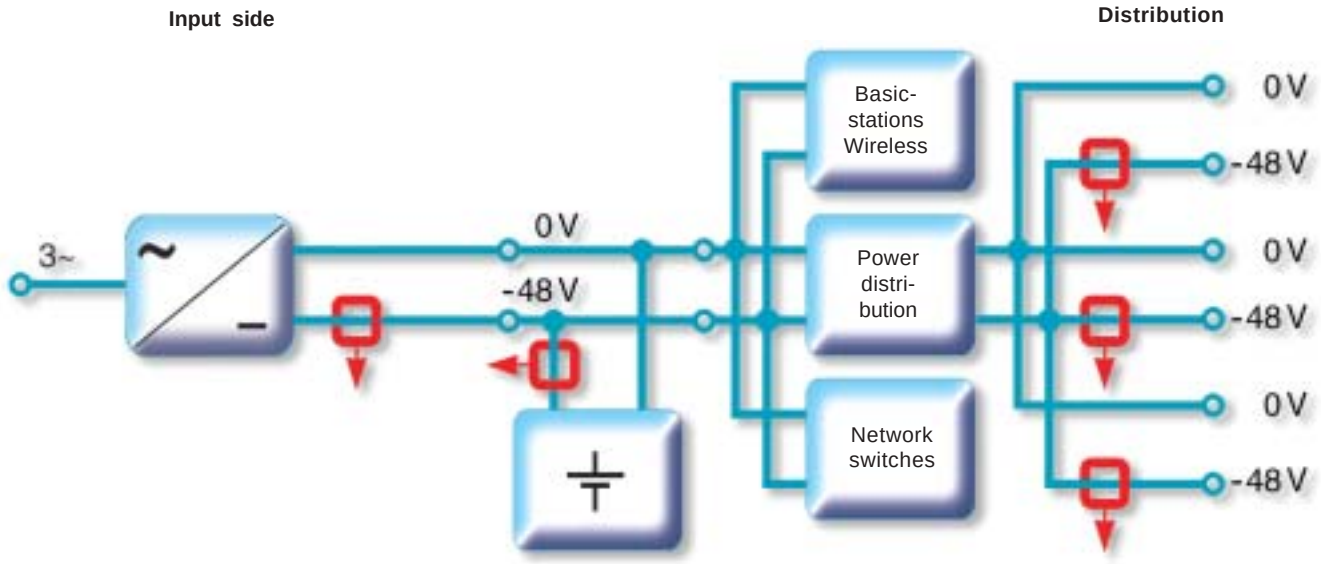

Fig.10: Current measurements in TeleCom power supply applications

5 Years Warranty
on LEM Transducers

LEM designs and manufactures high quality and
high reliability products for its customers over the entire world.

Since 1972, we have delivered several million current and voltage transducers which are, for most of them, still in operation on traction vehicles, industrial motor drives, UPS systems and many other applications requiring high quality standards.

Our 5 years warranty applies on all LEM transducers delivered from the 1st. of January 1996 and is valid in addition to the legal warranty. The warranty granted on our Transducers is for a period of 5 years (60 months) from the date of their delivery.

During this period we shall replace or repair at our cost all defective parts (provided the defect is due to defective material or workmanship).

Further claims as well as claims for the compensation of damages, which do not occur on the delivered material itself, are not covered by this warranty.

All defects must be notified to us immediately and faulty material must be returned to the factory along with a description of the defect.

Warranty repairs and or replacements are carried out at our discretion. The customer bears the transport costs. An extension of the warranty period following repairs undertaken under warranty cannot be granted.

The warranty will be invalidated if the buyer has modified or repaired, or has had repaired by a third party the material without LEM's written consent.

The warranty does not cover any damage caused by incorrect conditions of use and cases of force majeure. No responsibility will apply except legal requirements regarding product liability.

The warranty explicitly excludes all claims exceeding the above conditions.

LEM, Geneva, January 1. 2001
Business Area Components

Paul Van Iseghem
President of LEM Components

LEM International Sales Network

Europe • Middle East

Austria
LEM NORMA GmbH
Liebermannstraße F 01
A-2345 Brunn am Gebirge
Tel. 02236/69 15 02
Fax 02236/69 14 00
e-mail: lna@lem.com

BeNeLux
LEM Belgium sprl-bvba,
Route de Petit-Roeulx, 95
B-7090 Braine-le-Comte
Tel. +32 67 55 01 14
Fax +32 67 55 01 15
e-mail: lbe@lem.com

Croatia
Proteus Electric
Via di Noghere 94/1
I-34147 Muggia-Aquilinia
Tel. +39/40/232188
Fax +39/40/232440
e-mail: dino.fabiani@proteuselectric.it

Czech Republic
PE & ED Spol. S.R.O.
Koblovska 101/23
CZ-71100 Ostrava/Koblov
Tel. 069/6239256
Fax. 069/6239531
email: petr.chlebis@vsb.cz

Denmark
Deltron-Conelec A/S
Banemarksvej 50 B
2605 Broendby
Tel. 45/43 43 43 42
Fax 45/43 29 37 00
e-mail: sales@conelec.dk

Finland
Etra-Dielectric Oy
Lampputie 2
SF-00740 Helsinki 74
Tel. 09/3699366
Fax 09/3699311
e-mail: hans.akerberg@etra.fl

France
LEM France Sarl,
La Ferme de Courtaboeuf
19 avenue des Indes
F-91969 Courtaboeuf Cedex
Tel. 01/69 18 17 50
Fax 01/69 28 24 29
e-mail: lfr@lem.com

Germany
LEM Deutschland GmbH
Frankfurter Straße 74
D-64521 Groß-Gerau
Tel. 06152/9301-0
Fax 06152/846 61
e-mail: postoffice.lde@lem.com

Hungary
Orszaczky Trading Co. Ltd
Korányi Sandor U. 28
H-1089 Budapest
Tel. 1/314 42 25
Fax. 1/314 42 25
email: orszaczky@axelero.hu

Italy
LEM Italia Srl
via V.Bellini, 7
I-35030 Selvazzano Dentro, PD
Tel. 049/805 60 60
Fax 049/805 60 59
e-mail: lit@lem.com

Israel
Ofer Levin Technological Application
PO Box 18247
IL-Tel Aviv 61181
Tel. 03/5586279
Fax 03/5586282
e-mail: ol_teap@netvision.net.il

Norway
Holst & Fleischer A/S
Box 5404 Majorstuen
N-0305 Oslo
Tel. 22 06 63 50
Fax 22 06 63 51
e-mail: knut.arneberg@oslo.online.no

Poland
DACPOL Co., Ltd.
Teren Zakladu Lamina
Ul. Pulawska 34
PL-05-500 Piaseczno
Tel. 022/757 07 13
Fax 022/757 07 64
e-mail: dacpol@dacpol.com.pl

Portugal
Maquindus Engenharia e
serviços, Lda
Rua da Ponte, 5
P-4435 Rio Tinto
Tel. 01/24 85 02 80/1
Fax 01/24 85 02 90
e-mail: xcarvalho@mailtelepac.pt

Rumania
SYSCOM-18 S.r.l.
Calea Plevnei 139, sector 6
R-77131 Bucarest
Tel. 1/222 91 76
Fax 1/222 91 76
e-mail: georgeb@syscom.ro

Russia
TVLEM
Marshall Budionny Str.
170023 TVER
Tel. 0822/44 40 53
Fax 0822/44 40 53
e-mail: tvelem@lem.com

Slovenia
Proteus Electric
Via di Noghere 94/1
I-34147 Muggia-Aquilinia
Tel. +39/40/232188
Fax +39/40/232440
e-mail: dino.fabiani@proteuselectric.it

Spain
SUMELEC
Doris de Schade S.L.
Avd. Sancho Rosa 66
E-28708 San Sebastian de los Reyes
Tel. 91/623 68 28
Fax 91/623 67 02
e-mail:
abisum@santandersupernet.com

Sweden
Beving Elektronik A.B.
Jägerhorns väg 8
S-14105 Huddinge
Tel. 08/680 11 99
Fax 08/680 11 88
e-mail:
information@bevingelektronik.se

Switzerland
SIMPEX Electronic AG
Binzackerstrasse, 33
CH-8622 Wetzikon
Tel. 01/931 10 10
Fax 01/931 10 11
e-mail: contact@simpex.ch

Switzerland
LEM SA
8, Chemin des Aulx
CH-1228 Plan-les-Ouates
Tel. 022/706 11 11
Fax 022/794 94 78
e-mail:lsa@lem.com

Turkey
Özdisan Electronik Pazarlama
Galata Kulesi Sokak N°34
TR-80020 Kuledibi/Istanbul
Tel. 0212/252 0884
Fax 0212/244 59 43
e-mail: oabdi@ozdisan.com

United Kingdom and Eire
LEM U.K.Ltd
Geneva Court, 1
Penketh Place, West Pimbo,
Skelmersdale
Lancashire WN8 9QX
Tel. 01695/72 07 77
Fax 01695/507 04
e-mail: luk@lem.com

Africa • America

Brazil
Intech Engenharia Ltda
5 Andar CJ 52
Av. Adolfo Pinheiro, 1010
BR-04734-002 Sao Paulo
Tel. 011/554 81 433
Fax 011/554 81 433
e-mail:
intech@intech-engenharia.com.br

Canada
Alliance Components Inc.
270 Warden Avenue
CAN-Scarborough, ON M1N 3A1
Tel. 416-690-7810
Fax 416-690-7811

Chile
ELECTROCHILE
Freire 979 of. 303-304
Quilpue
Tel. 032/92 32 22
Fax 032/92 32 22
e-mail: elechile@entchile.net

South Africa
Denver Technical Products Ltd.
P.O. Box 75810
SA-2047 Garden View
Tel. 011/626 20 23
Fax 011/626 20 09
e-mail: denvertech@pixie.co.za

USA
LEM U.S.A., Inc.
6643 West Mill Road
USA Milwaukee, Wi 53218
Tel. 414/ 353 07 11 or
800/236 53 66
Fax 414/353 07 33
e-mail: lus@lem.com

USA
LEM U.S.A., Inc.
27 Rt 191A
PO Box 1207
USA-Amherst, NH 03031
Tel. 603/672 71 57
Fax 603/672 71 59
e-mail: gap@lem.com

USA
LEM U.S.A., Inc.
7985 Vance Drive
USA Arvada, CO 80003
Tel. 303/403 17 69
Fax 303/403 15 89
e-mail: dlw@lem.com

Asia • Pacific

Australia
Fastron Technologies Pty Ltd.
25 Kingsley Close
Rowville
Melbourne
Victoria 3178
Tel. 61-(0)397635155
Fax. 61-(0)397635166
e-mail: sales@fastron.com.au

China
Beijing LEM Electronics Co. Ltd
No. 1 Standard Factory
Building B
Airport Industria Area
CN-Beijing 101300
Tel. 10/80 49 04 70
Fax 10/80 49 04 73
e-mail: hzh@lem.com

India
Globetek
122/49, 27th Cross
7th Block, Jayanagar
IN-Bangalore-560082
Tel. 80/663 57 76
Fax 80/658 1556
e-mail: globetek@blr.vsnl.net.in

Japan
NANALEM K.K.
1-27-14 Morino, Machida
J-194-0022 Tokyo
Tel. 042/725 8151
Fax 042/728 8119
e-mail: nle@lem.com

Korea
Youngwoo Ind. Co.
P.O.Box 10265
K-Seoul
Tel. 02/5 93 8146
Fax 02/5 35 04 41
e-mail:ygwoo@korea.com

Singapore
Overseas Trade Center Ltd.
03 - 168 Bukit Merah L.1
BLK 125/Alexandra Vil.
RS-150125 Singapore
Tel. 272 60 77
Fax 278 21 34
e-mail:octpl@signet.com.sg

Taiwan
Tope Co., Ltd.
P.O. Box 101-356
3F, No. 344, Fu Shing Road
ROC-10483 Taipei
Tel. 02/509 54 80
Fax 02/504 31 61
e-mail: tope@ms1.hinet.net

Taiwan
LECTRON Co., Ltd.
9F, NO 171, SEC.2,
Tatung. RD. Hsichih City
Taipei Hsien 221
Taiwan, R.O.C
Tel. 886 2 8692 6023
Fax. 886 2 8692 6098
e-mail: silas@lectron.com.tw

BAC/E, 02.03

Distributor

LEM Components
8, Chemin des Aulx, CH-1228 Plan-les-Ouates
Tel. +41/22/706 11 11, Fax +41/22/794 94 78
e-mail: lsa@lem.com; www.lem.com

Publication CH 22103a US (02.03 • 5.5 • CDH)