Current Transducer LT 300-S/SP45

I_{PN} = 300 A

For the electronic measurement of currents : DC, AC, pulsed..., with a galvanic isolation between the primary circuit (high power) and the secondary circuit (electronic circuit).

Electrical data

I_{PN}	Primary nominal r.m.s. current		300		A
I_P	Primary current, measuring range		0 .. ± 600		A
R_M	Measuring resistance		$R_{M\,min}$	$R_{M\,max}$	
	with ± 24 V	@ ± 300 A_{max}	25	140	Ω
		@ ± 600 A_{max}	25	40	Ω
I_{SN}	Secondary nominal r.m.s. current		100		mA
K_N	Conversion ratio		1 : 3000		
V_C	Supply voltage (+ 5 %, - 10 %))		± 24		V
I_C	Current consumption		28 + I_S		mA
V_d	R.m.s. voltage for AC isolation test, 50 Hz, 1 mn		12 [1]		kV
			1 [2]		kV

Accuracy - Dynamic performance data

			Typ	Max	
X_G	Overall accuracy @ I_{PN}, T_A = 25°C		± 0.5		%
e_L	Linearity		< 0.1		%
I_O	Offset current @ I_P = 0, T_A = 25°C			± 0.2	mA
I_{OT}	Thermal drift of I_O	- 25°C .. + 70°C	± 0.2	± 0.4	mA
t_r	Response time [3] @ 90 % of I_{PN}		< 1		µs
di/dt	di/dt accurately followed		> 50		A/µs
f	Frequency bandwidth (- 1 dB)		DC .. 150		kHz

General data

T_A	Ambient operating temperature	- 25 .. + 70	°C
T_S	Ambient storage temperature	- 40 .. + 85	°C
R_S	Secondary coil resistance @ T_A = 70°C	65	Ω
m	Mass	250	g
	Standards	EN 50155	

Notes : [1] Between primary and secondary + shield
[2] Between secondary and shield
[3] With a di/dt of 100 A/µs.

Features

- Closed loop (compensated) current transducer using the Hall effect
- Insulated plastic case recognized according to UL 94-V0.

Special features

- I_P = 0 .. ± 600 A
- K_N = 1 : 3000
- V_C = ± 24 (+ 5 %,- 10%) V
- V_d = 12 kV [1]
- T_A = - 25°C .. + 70°C
- Shield between primary and secondary
- Connection to secondary + shield on 4 M4 threaded studs
- VRT Burn-in
- Railway equipment.

Advantages

- Excellent accuracy
- Very good linearity
- Low temperature drift
- Optimized response time
- Wide frequency bandwidth
- No insertion losses
- High immunity to external interference
- Current overload capability.

Applications

- AC variable speed drives and servo motor drives
- Static converters for DC motor drives
- Battery supplied applications
- Uninterruptible Power Supplies (UPS)
- Switched Mode Power Supplies (SMPS)
- Power supplies for welding applications.

020212/2

Dimensions LT 300-S/SP45 (in mm. 1 mm = 0.0394 inch)

Front view

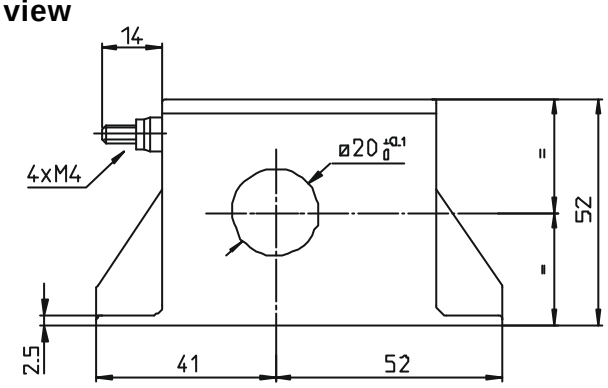

Left view

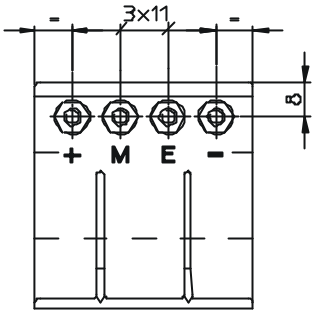

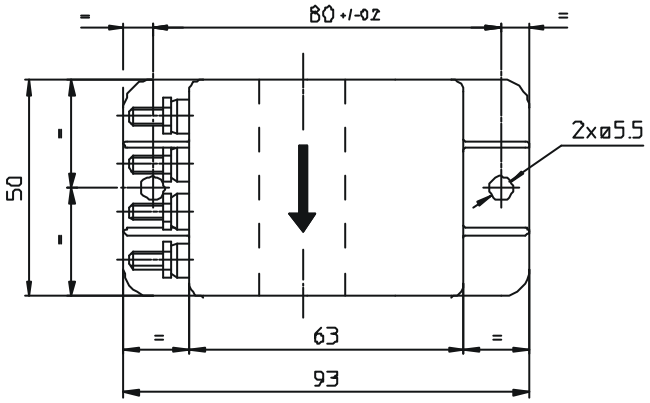

Top view

Secondary terminals

Terminal + : supply voltage + 24 V
Terminal M : measure
Terminal E : shield
Terminal - : supply voltage - 24 V

Connection

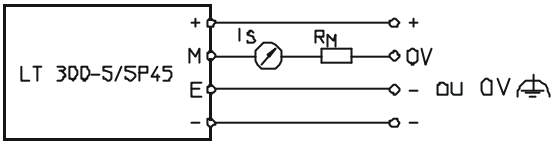

Mechanical characteristics

• General tolerance	± 0.3 mm
• Fastening	2 holes ∅ 5.5 mm
• Primary through-hole	∅ 20 mm
• Connection of secondary	M4 threaded studs
Fastening torque	1.2 Nm or .88 Lb. - Ft.

Remarks

- I_S is positive when I_P flows in the direction of the arrow.
- Temperature of the primary conductor should not exceed 100°C.
- Dynamic performances (di/dt and response time) are best with a single bar completely filling the primary hole.

LEM reserves the right to carry out modifications on its transducers, in order to improve them, without previous notice.